NORTHERN POWERGRID

Connections Customer Forum

6 November 2018

National Railway Museum York

Welcome

- We're here to help you get connected.
- We want to hear from you.
- Packed agenda.
- Ask questions using Slido.
- Customer surgeries.
- Feedback forms.

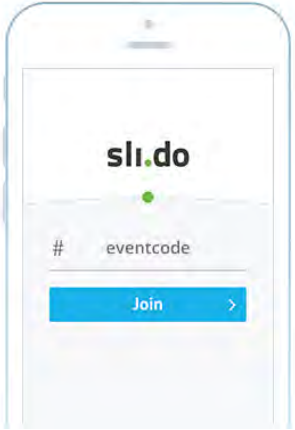

www.sli.do/

#getconnected JOIN

Connections Business Update

Mike Hammond

Head of Connections Services

Connections update – Nov 2018

Current performance

- BMCS (YTD) Northern Powergrid 4th overall (87.0%) Connections 4th (85.8%).
- 2018/19 Reg year – LVSSA&B Av time to quote & deliver just outside Ofgem reward target.
- ICE - 2017/18 deemed a success by Ofgem and stakeholders - zero penalty.
- ICE - 26 commitments in 2017/18 plan, all actions and associated outcomes delivered on or before target. 22 actions being delivered in 2018/19 plan.

Outputs delivered

- ✓ Connection Offer Expenses – 6 April 2018.
- ✓ 26 service improvement actions.
- ✓ Workshops on connections topics suggested by customers.
- ✓ New ways to engage and interact - webinars, webcasts, social media.

Ongoing initiatives

- Refinement of small works enduring process ongoing.
- Commercial changes - Connection Offer Expenses (A&D fees) implemented.
- Technical innovation - ANM, Storage, DNO to DSO continues.
- Emerging technology - EV's, heat pumps and solar - fast track process.
- New Requirements for Generators (17 November deadline).
- On-going stakeholder engagement drives our service improvement plans.

ED1 environment

- Minor cons BMCS reward/penalty.
- Minor cons TTC/TTQ reward.
- Major works ICE incentive - penalty only.
- Constrained networks - flexible solutions.
- DNO to DSO transition.

Our Service Improvement Plans

Emma Wilson

Connections Stakeholder Relations

Connections stakeholder engagement

STAKEHOLDER PANEL

CONNECTIONS
CUSTOMER FORUMS

MONTHLY
CUSTOMER
AND ICP
SURGERIES

We gather feedback from a range of different sources.

STAKEHOLDER
NEWSLETTERS

Formal stakeholder
consultations

telephone
MARKET
RESEARCH

FACE TO FACE
DISCUSSIONS

Developing our service improvement plans

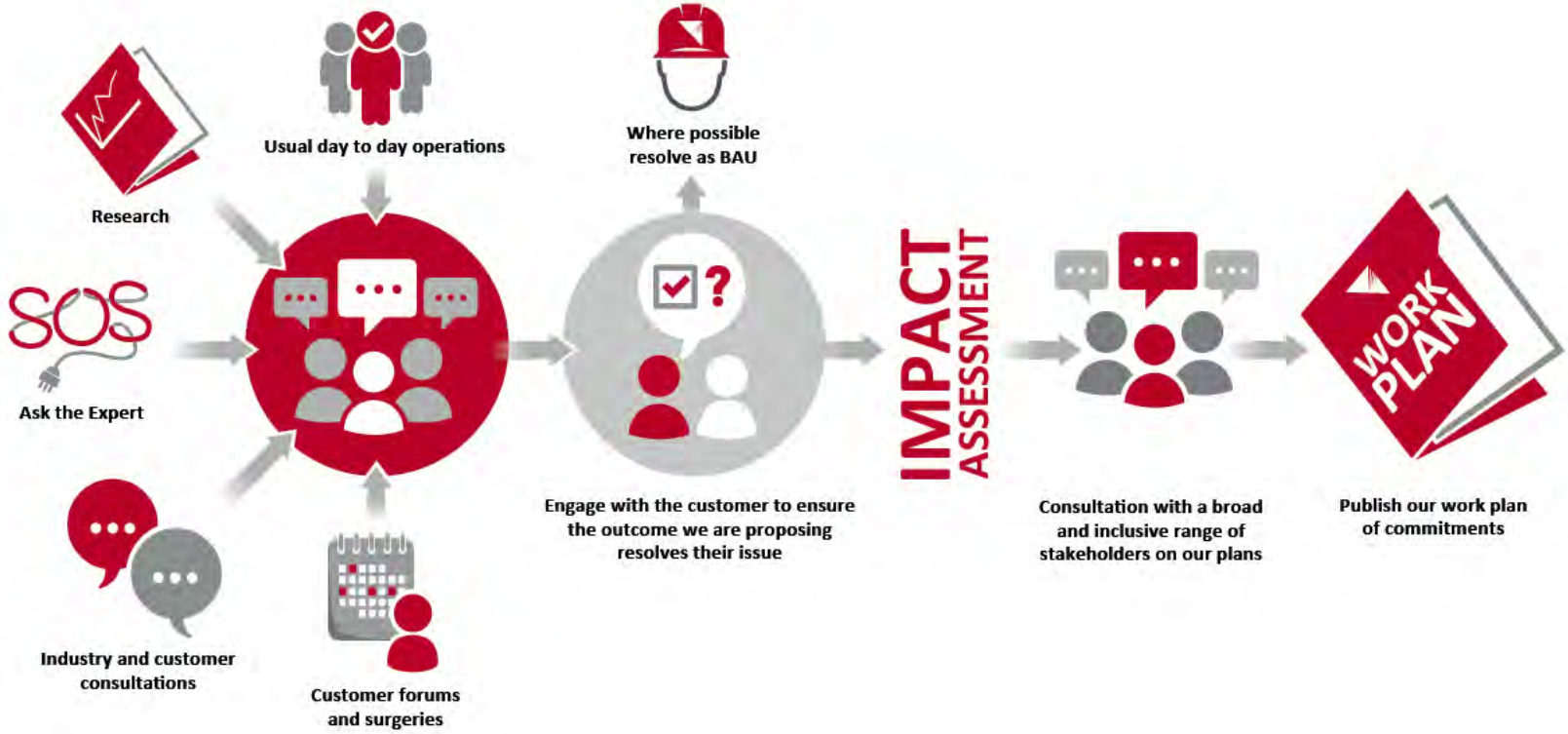

Incentive on Connections Engagement (ICE)

- The Incentive on Connections Engagement (ICE) encourages DNOs to continually improve service to major works connections customers.
- Each year we produce a detailed work plan plan of service improvement actions developed together with our connections stakeholders.
- In our annual ICE submission - published in May - we look back at the service improvements we made in the past regulatory year and look forward at the improvements we will make in the coming year.

Acting on your feedback

"Very useful webinar - thank you! Could you give any details on where else you will be considering deploying ANM?"

ICE ACTION

"We would like to encourage all DNOs to commit to an annual outage plan, regularly updated, as the most direct and informative way to keep generators informed of these events."

"…most of the DNOs issue KMZ (Google Earth) files of their network (HV and above). Is this something you are doing yet?"

"It may be helpful to have a list of engineers to discuss a project with before applying"

On "ongoing feedback": We have seen SSE adopt the practice of "DG owners operators forum" at our request, mid-year."

ICE ACTION

"Bulletin giving info on progress and expected offer date"

"The storage commitments are commendable and we would ask NPg to go further and publish guidance on how generators should go about making an application for hybrid generation-storage sites"

Five new commitments

1. Connection offer expiry dates.
2. Engage with stakeholders with an interest in EVs.
3. Further engagement on A&D fees.
4. Legal agreements for ICPs.
5. Faster reconnection of knocked down telecommunications street furniture.

How you can give us feedback

- Via email @ ICE@northernpowergrid.com
- At our monthly connections surgeries.
- At any of our workshops, seminars or customer forums.
- By talking to one of our team.
- Stakeholder consultations.
- Social media.
- Via your feedback form.

Upfront Engagement

Phil Jagger

Design Team Manager

Digital resources – guide prices

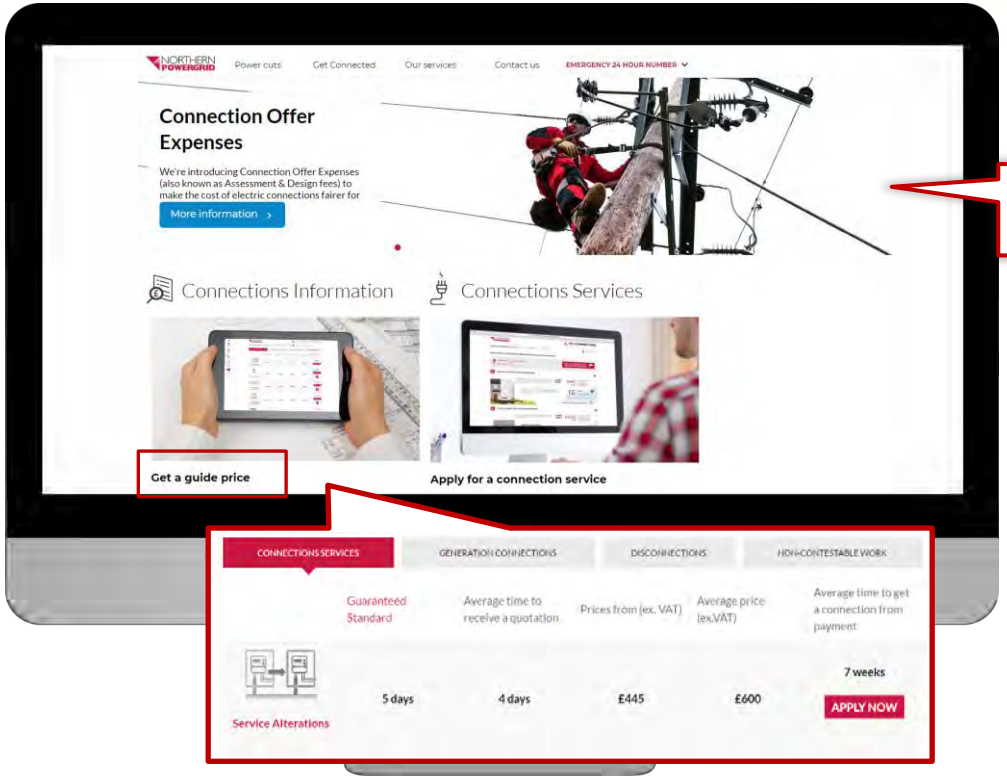

Links to key topics

Digital resources – indicative price calculators

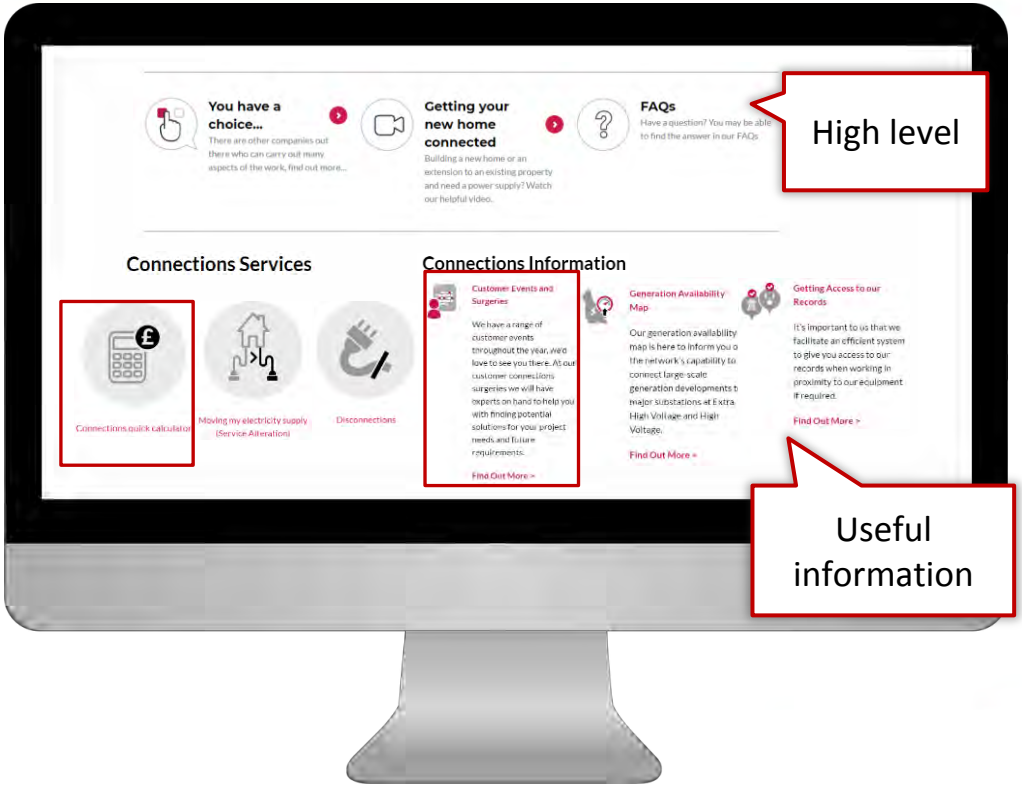

Digital resources – indicative price calculators

- Now available on our website – Generation & Load.
- Assumes there are no local issues.
- For <1MW, assumes you can loop into an existing circuit.
- For 1-8MW, assumes you need a dedicated 11kV circuit back to our primary substation.
- You need to know how far away the substation or local 11kV circuit is before using the tool.

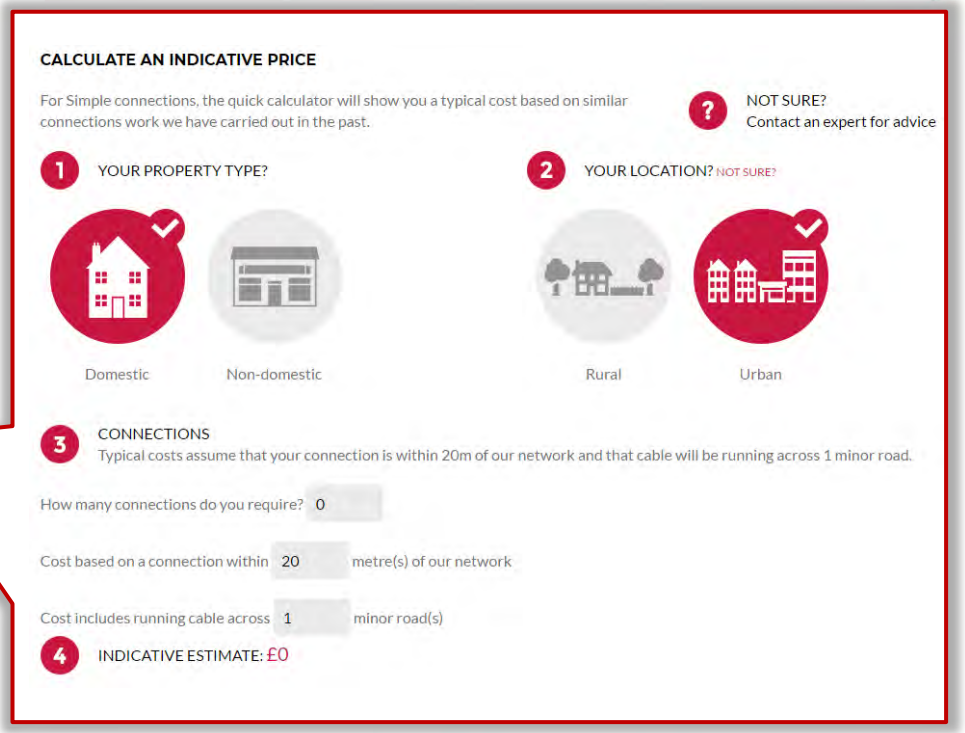

Digital resources - availability heat maps

Network capability to connect large-scale developments to major substations.
www.northernpowergrid.com/demand-availability-map

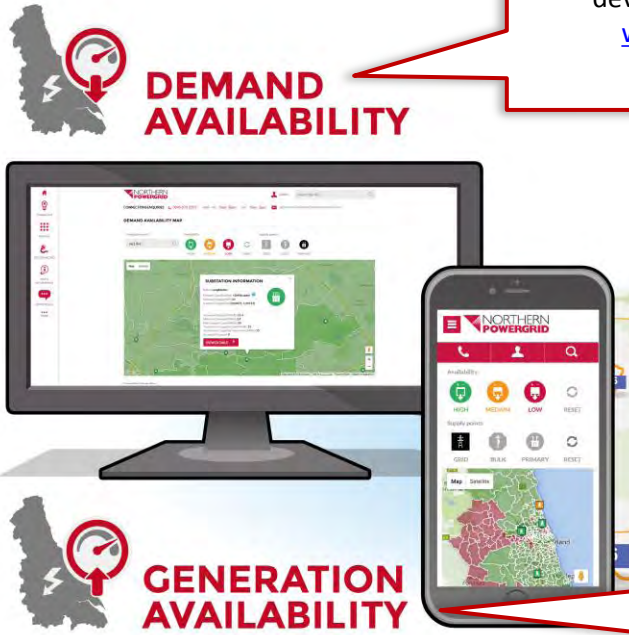

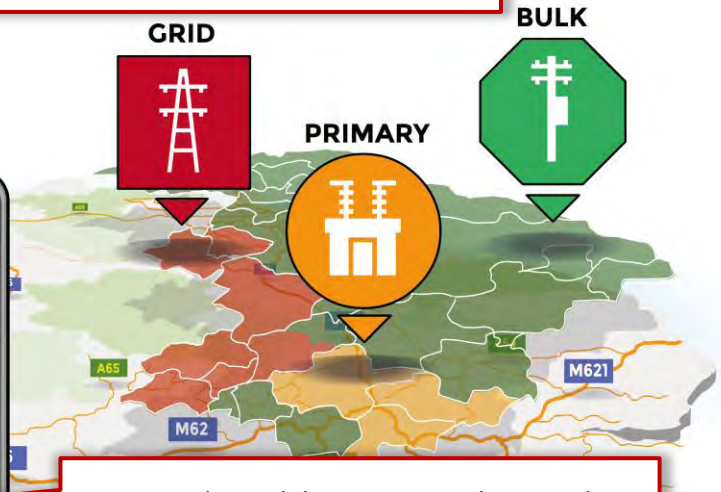

Network capability to connect large-scale generation developments.
www.northernpowergrid.com/generation-availability-map

Digital resources - availability heat maps

- Generation heat maps first published Autumn 2015.
- Interactive demand and generation maps introduced Spring 2016
  - Updates were sporadic.
- By January 2017
  - Monthly updates achieved;
  - Dedicated resource.

Digital resources - availability heat maps

- To inform you of the network's potential capability to connect large scale generation and demand projects.
- Aimed at HV and EHV connections only.
- Maps all our 132kV, 66kV and 33kV substations, including those with 11kV and 20kV (HV) circuit outlets.
- Does not include:
  - HV circuit data
  - Low voltage data

Digital resources - availability heat maps

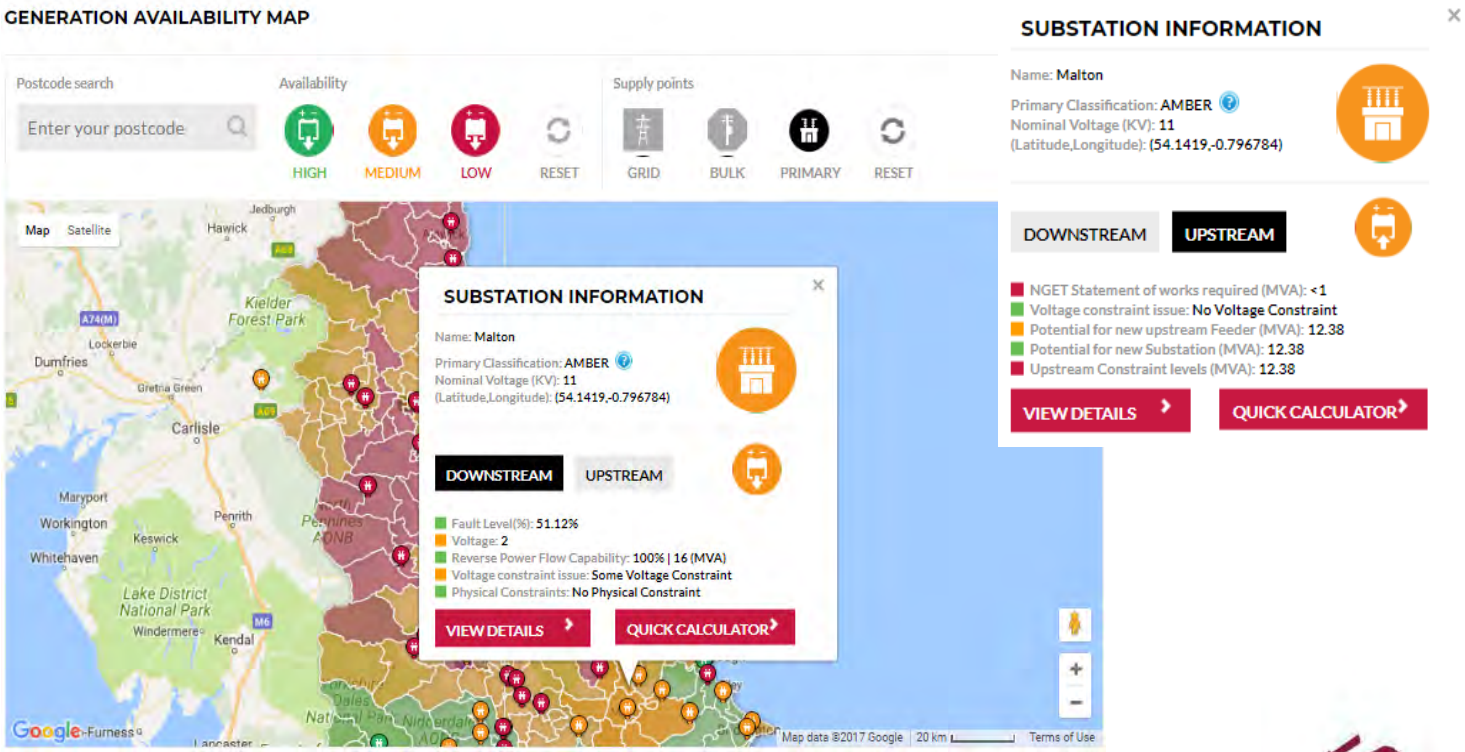

Face to face - contact our engineers

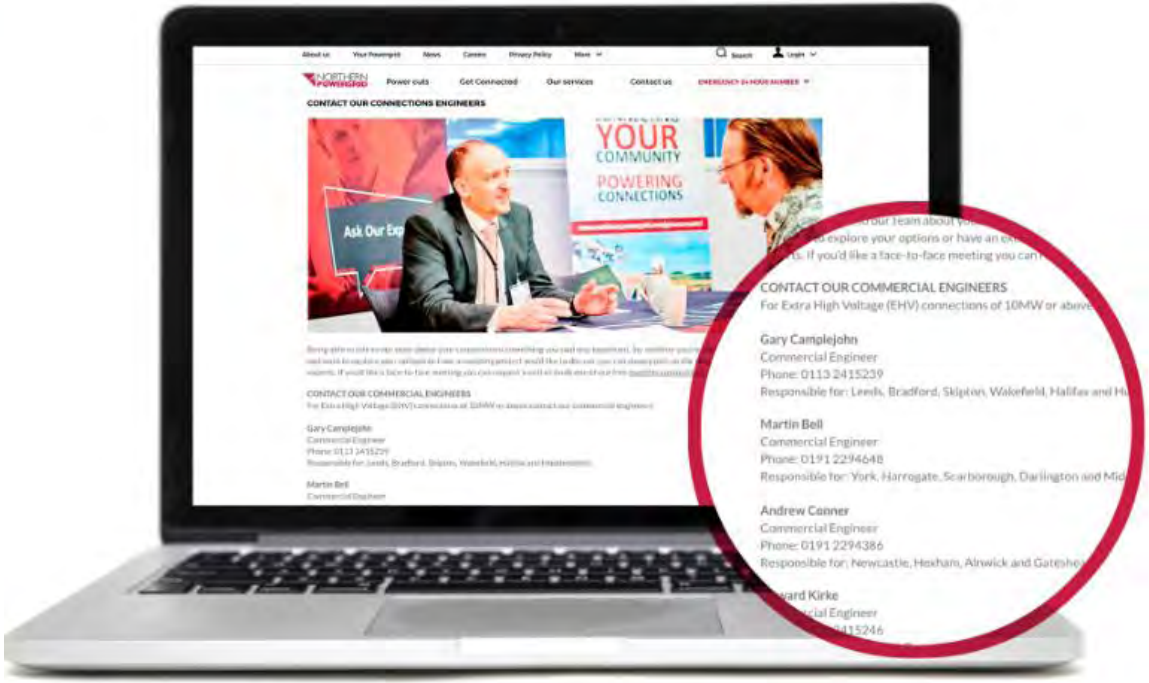

ICE ACTION

"It may be helpful to have a list of engineers to discuss a project with before applying"

Face to face - connections surgeries

- Monthly surgeries.
- Bookable via our website.
- Drop-in sessions at all our connections workshops and events.
- Request a visit.

Other pre-application information

- Ask the Expert.
- Webcasts and webinars.
- Focussed workshops and connections events.

Local Authority discovery sessions

- Following on from our successful EV workshop in October 2018.
- Explore the opportunities and challenges ahead together.
- Taking place Q1, 2019.
- Register your interest at yourpowergrid@northernpowergrid.com

Connections Offer Expenses

Derek Fairbairn

System Design Manager

Our position

- We are legally obliged to provide a connection offer on request under the Electricity Act and in doing so incur Connection Offer Expenses (also known as A&D fee) costs.
- We are only permitted to recover the reasonably incurred costs of providing those connection offers.
- We have established our policy position and have no plans to change.
- We believe we have a fair, cost reflective approach that meets the spirit of the regulations.

Our position

- Our implementation approach has driven better conversations with customers and we will continue to develop and improve customer service improvement developed from good industry practice and discussions with our stakeholders.
- Further information on the costs of preparing the estimate or connection offer can be found at: www.northernpowergrid.com/connection-offer-expenses

The need for upfront fees

- When the government consulted on this issue the majority of respondents favoured allowing DNOs to charge A&D fees where the DNO has incurred connection offer expenses.
- DNOs remain cost neutral since we have always been legally allowed to recover A&D fees - i.e. these are not new costs, only the timing and who pays has changed.

The need for upfront fees

- Prior to the introduction of A&D fees those applicants who accepted a connection offer paid the costs of those who do not accept. The previous system:
  - Encouraged multiple, repeat and speculative connection requests;
  - Diverted costs and resources to provide abortive or speculative offers;
  - Tied up network capacity which could otherwise be allocated to other applicants ready to proceed.
- We agree with the governments position that introducing A&D fees is fairer, with more applicants paying towards the costs of preparing connection offers and that this will:
  - improving the efficiency of the connections process and the service applicants receive;
  - support the Government's commitment to reduce the costs of energy as those projects connecting will pay lower A&D fees.

What A&D fees contribute to

- The A&D fees you are charged will go towards the following typically costs:
  - Processing your application and assessing the specific information required;
  - Undertaking any site surveys and meetings that may be required;
  - Assessing the impact on the existing distribution system;
  - Designing any reinforcement works which may be required;
  - Designing the extension to the distribution system;
  - Preparing the scheme drawings and the quotation;
  - Obtaining the necessary internal technical and commercial approvals prior to making you a formal offer.

What A&D fees contribute to

- The A&D fees you will be required to pay depends on the capacity and voltage at which your connection is to be made and further details are available on our website at: www.northernpowergrid.com/connection-offer-expenses

HOW ARE THE CHARGES CALCULATED

The charges have been calculated as being the reasonable cost we incur in doing the following activities at each voltage level:

1. Identifying the most appropriate point on the Distribution System at which the Connection can be made and determining the assets that are required to make that Connection;

2. Assessing whether the Connection and/or the required capacity may have an impact on the Distribution System and/or on a transmission system and whether any reinforcement of the Distribution System is required; and

3. The engineering and administrative time required to process your application and to design the specific technical solution and offer terms for the Connection, including any discussions with you in respect of your requirements.

INFORMATION ON CANCELLATIONS AND SUBSEQUENT OFFERS

If you cancel your application during the "cooling off" period, you will not be charged.

If you cancel your application after the "cooling off" period, you will be charged for the expenses we have incurred and you will be advised of the amount of the charge in our letter confirming the cancellation. A separate invoice will be issued.

Subsequent requests where your requirements are exactly the same will incur a charge of 75% of the full fee. Where there are differences in your requirements or if the technical proposal or costs have changed you will be charged in full.

Industry stakeholder feedback

- The views of industry stakeholders have been sought and some of the key points are covered below:

  "There is a variance in A&D fees across different DNOs"

  - Differences in DNOs business structures mean they incur different costs and although the regulations do not specify how charges should be calculated there are existing legal and regulatory safeguards in place to prevent over recovery.

  "Charges should be transparent"

  - All DNOs use the same categories within their individual Connection Charging Statements that are prepared in accordance with the licence and the format is governed by Ofgem.

Industry stakeholder feedback

- The views of industry stakeholders have been sought and some of the key points are covered below:

  "There should be safeguards to prevent DNOs from over-recovering"

  – We fully comply with existing legal arrangements to prevent over-recovery.

  "Have DNOs adequately engaged with stakeholders on A&D fees?"

  – Throughout the development of the regulations we have taken steps to engage with interested stakeholders which include ICE plans, stakeholder events, surgeries, the DER Connections Steering Group, information on our website and direct engagement with customers.

What is available without incurring an A&D fee?

- There is a wealth of information and assistance available to you before we incur costs and you are required to pay an A&D fee, including:
  - Our monthly surgeries are bookable via our website at www.northernpowergrid.com/customer-events-and-surgeries. We also offer drop-in surgeries at our customer forums and workshops;
  - We developed as an ICE action in response to stakeholder requests and encourage customers to make contact with our engineers either to have a conversation or to request a visit outside the monthly surgery schedule. Further information is available at www.northernpowergrid.com/contact-our-connections-engineers;
  - Demand and generation heat maps are available which provide an indication of the networks capability to connect large-scale developments;
  - We are developing training for customers so they can fully benefit from this information;
  - We held a heat map webinar last year and considering a follow up in early 2019 if stakeholder think this would be helpful. The previous webinar is available at: https://youtu.be/ZEHrBZXKNWc.

What is available without incurring an A&D fee?

- Connected and contracted register
  - Our contracted capacity register is published online every month and is provided in excel and PDF formats to enable customers to work with the data we provide www.northernpowergrid.com/contracted-capacity-register. The register provides a list of generators that are connected to our network and details accepted projects.
  - In 2019 we will review this against the Electricity Networks Association's published 'Best practice pre-application' document.
- Multiple application optioneering - based on customer feedback we understand how important it is to be able to consider multiple connection options as part of the preparation of a firm quotation www.northernpowergrid.com/multiple-application-optioneering-process.
- Up to 3 budget options provided for a reduced A&D fee;
  - You can request up to 3 budget estimates as part of a single application for a single fee plus 20%
  - So a budget estimate for HV generation >1MVA would be £280. Three separate options would cost £840 (3 x £280). The new offering under single application would be £280 + 20% = £336 saving the customer £504.

Questions?

New Requirements for Generators

Joe Spencer

Quality and Regulatory Analyst

What is Requirements for Generators (RfG)

- The requirements of the RfG code apply only to new generation connections customers – they do not apply to existing generation customers.

New Requirements for Generators

- Engineering Recommendation **G98** is the replacement of G83.
- Engineering Recommendation **G99** is the replacement of G59.
- Any generator that is intending to commission on or after 27 April 2019 must comply with G98/G99 as appropriate.
- Northern Powergrid cannot allow connection of the new generator to the distribution network after that date if the scheme does not comply with G98/G99.
  - the exception to this rule is that for any generator must have entered into a contract to buy the main generating plant prior to 17 May 2018 and must provide satisfactory evidence to us prior to 17 November 2018.

Keeping you informed

- We have created a dedicated webpage explaining RfG and linking to more detailed information on the ENA website.
- Two stakeholder bulletins issued to all our connections customers.
- Letter sent to any customer with an accepted but yet to be connected scheme.
- Letter sent to any customer with a valid (unaccepted) quotation.

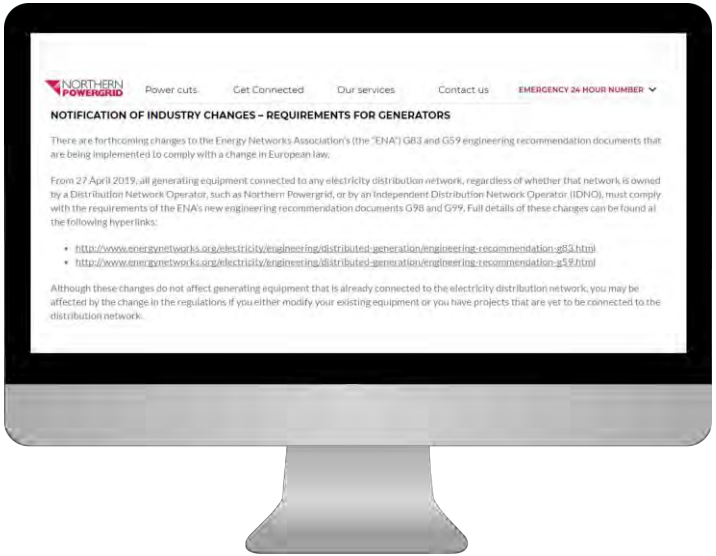

Statement of Works and ANM

David van Kesteren

Senior Asset Management Engineer

ANM - Impact of connecting generation

- Key network drivers
  - Develop an economic, efficient and coordinated network.
  - Operate equipment within its design capability.

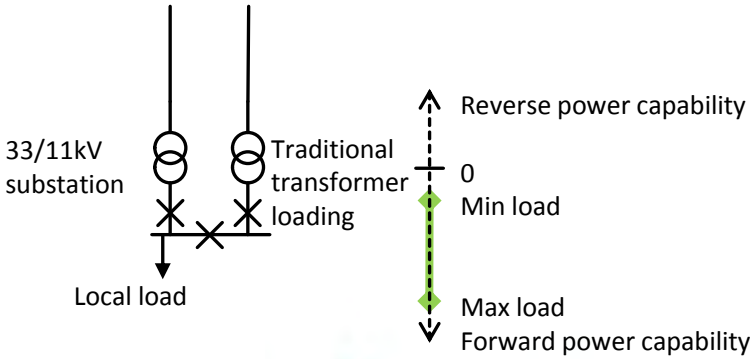

ANM - Impact of connecting generation

- Key network drivers
  - Develop an economic, efficient and coordinated network
  - Operate equipment within its design capability
- Potential frequency of overload driven by combination of demand and generation profiles
  - Many potential constraints occur infrequently
- Cost of reinforcing for infrequent constraints is uneconomic and inefficient for both the generator and the network operator.
- A constrained connection, with lower capital cost, can be both economic and efficient.

Simple local constraint signal can limit generator during outage conditions

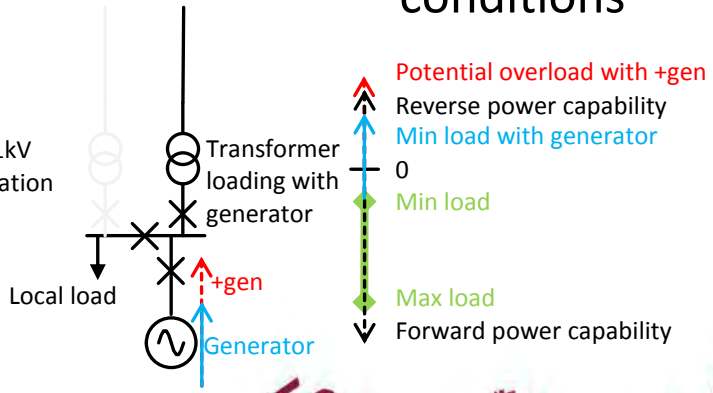

ANM - Connecting multiple generators

- Multiple generators can cause wider network loading issues.
- Constraints may only be needed for short periods to avoid overloads.
- ANM as a solution
  - Requires a wide-area control system with reliable comms;
  - It constrains generators only when necessary;
  - Consists of shared central /remote elements and local customer specific measurement / control points;
  - It is more beneficial when reinforcement costs are high and the level of required constraint is relatively low.

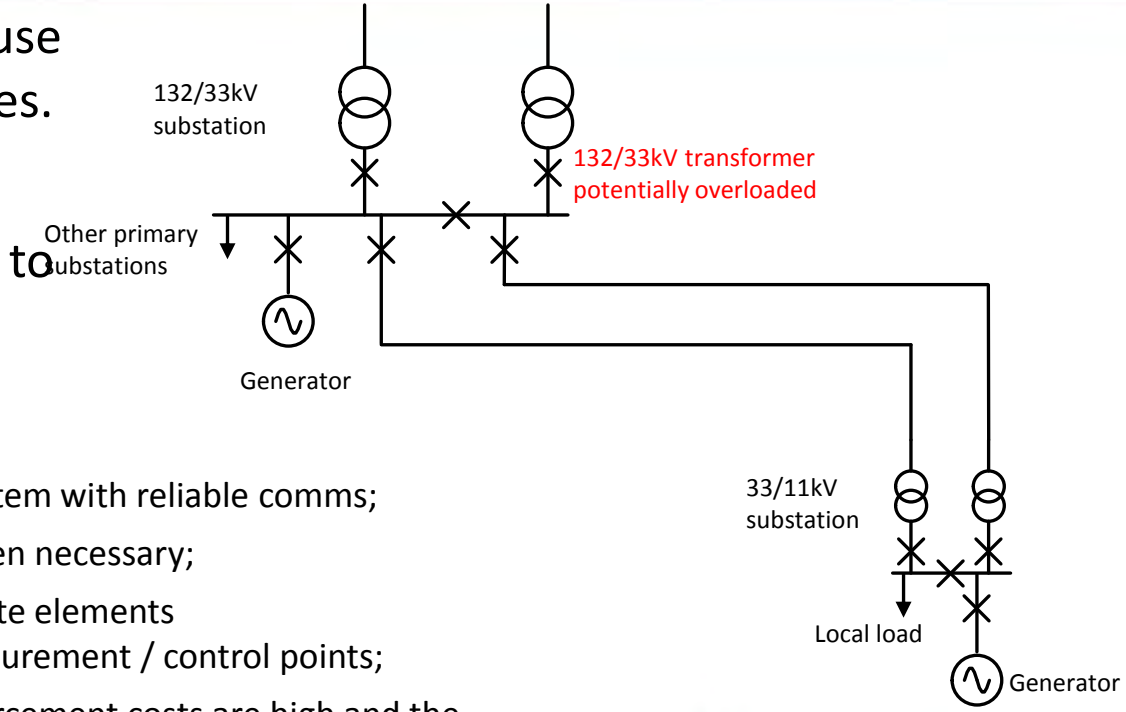

The Driffield ANM scheme

- 146MW of contracted generation in the group
- 122MW generation limit at minimum demand
- Network full during key periods
  - Early summer mornings (when it's windy)
  - Network outages (when it's windy)
- Conventional solution cost £6-12m
- ANM solution cost ~£900k shared + £100-150k sole
- Four generators signed up to ANM
- Real-time allocation of network capacity
- Allocated using Last In First Off (LIFO) principles
- Will allow all generators to operate outside key periods
- Driffield ANM go-live Q1 2019

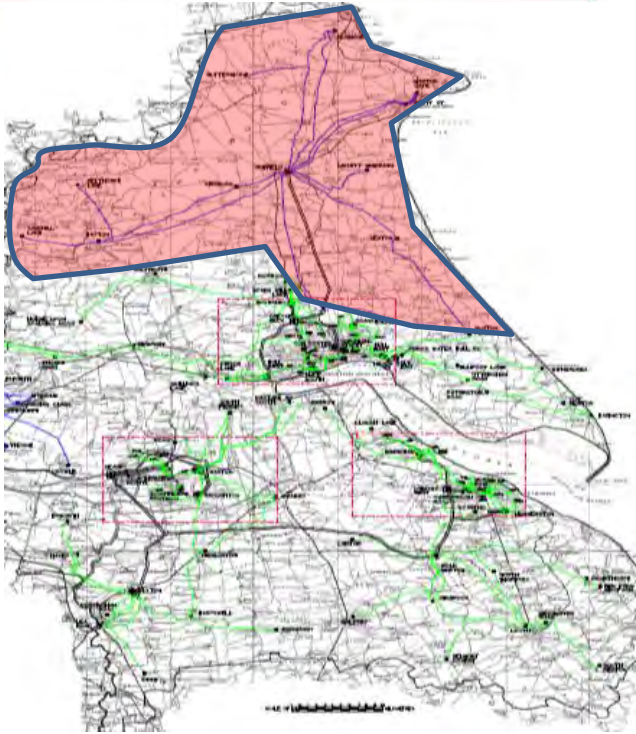

Interaction with National Grid

- National Grid (NG) is the operator of the GB transmission system and is responsible for balancing GB generation & demand.
- Capacity of generation on the NPg network will soon exceed our net peak demand.
- Generation connecting to the NPg network can directly affect the transmission system.
- The issues are similar to those seen at Driffield, but at higher voltages (275kV and 400kV).

2017/18 NPg area	MW
net winter peak demand	5,900
connected generation	3,500
contracted generation	3,300

2017/18 peak demand example	MW
Saltholme GSP net demand	-16
Operating generation	110
Saltholme GSP gross demand	94

What is the Statement of Works process?

- A formal process for sharing details of contracted generation with National Grid.
- NG determines whether the contracted generation causes any issues.
- If no issues then OK to connect the generation.
- If there is an issue then we must NOT connect the generation until we meet NG's requirements and NG confirm that it is OK to connect.
- The generator carries the liability for any works NG needs to do
  - NPg gets a Modification Offer and Construction Agreement for the works that are needed and the costs / liabilities are passed on to the contracted generator
  - NGET can impose intertrips and operational restrictions on the generator
- The generator either accepts the liabilities / restrictions or they are not allowed to connect.

Who is impacted and where?

- All GSPs have a site specific Statement of Works (SoW) threshold.
- Default threshold is 50MW cumulative.
- When the threshold is exceeded NPg requests a SoW from NG.
- Includes ALL generation >=1MW.
- LV schemes normally too small.
- All contracted generation above the threshold is caught by the SoW response from NG.

- GSP (Grid Supply Point)
  - The point of connection between the NPg distribution network and the NG transmission network.
- Northern Powergrid (NPg) has 40 GSPs across the region.
- Cumulative generation
  - Includes all new generation that has contracted to connect to the GSP since a SoW was last requested.

Statement of Works - how does it work?

- We track all generation offers >=1MW by GSP
  - Based on installed generation capacity (not agreed export capacity).
- If cumulative contracted offers plus live offers reaches or exceed the SoW threshold then we must tell the customer they need a SoW when we make the offer.
- We only actually submit a SoW request if/when the cumulative contracted offers reach the SoW threshold (ignoring live offers).
- The SoW request includes network and contracted generation data studies are done by our EHV connections design team and provided to NG.

What are the potential outcomes?

SoW response	Impact
No works required	Connect generation
Works required	Submit Modification Application **(3-6 months delay)** to identify the works
Modification offer response	
Works required, but can be managed	Connect generation, but with liabilities / costs / restrictions / additional generator capabilities
Works required before connection	Cannot connect until works are complete. Includes liabilities / costs
No works required (rare)	No liabilities / costs

What is Appendix G?

- *Appendix G* is a new section in the GSP connection agreement between NPg and NG.
  - It includes a list of all contracted generation at a GSP
  - It is not visible to customers but a summary of the key information can be found in our Heat Maps and the Long Term Development Statement (LTDS)
- New process being developed to make the SoW process more slick.
- For simple constraints the customer will receive details of any additional costs / liabilities / requirements with the connection offer.
  - Reduces the time delays associated with the current SoW process
  - Gives the customer earlier visibility of the overall costs of the connection
- NPg recently adopted Appendix G terms for Saltend North GSP (East of Hull).
- Expected to roll out at West Melton GSP later this year.

Roll out plans for ANM and App G

- ANM and SoW issues are closely linked.
- The selection process for ANM areas considers the potential for generation connections to cause network loading issues on the NPg network
  - This includes potential issues on the dedicated National Grid assets at GSPs.
- Many SoW issues are due to the potential reverse power flows at the GSP
  - The same issue that triggered the Driffield ANM scheme but at a higher voltage.
- Installation of an ANM scheme at the GSP is usually the most cost-effective solution when a SoW response identifies an issue.
- Although the Driffield ANM scheme has been initially setup to only manage the Driffield 66kV group, it is capable of being expanded to manage the whole of the GSP group (Creyke Beck GSP).

ANM annual area selection process

- Identify networks with potential / actual loading issues.
- Assess levels of customer connection request activity on each network.
- Identify potential reinforcement costs for each network.
- Identify potential cost of implementing ANM on each network
- Prioritise the networks that provide best overall benefit, taking into account all of the above.

New areas for ANM rollout

- In 2019 we intend to introduce ANM offers to the following GSP groups, where we have a combination of potential GSP and distribution network issues if generators continue to accept connection offers in the area:
  - Creyke Beck (Hull & East Riding of Yorkshire, excluding east to Spurn Point)
    - Extension of the Driffield ANM scheme
  - Saltend North (east of Hull, including east to Spurn Point)
  - Grimsby West and Keadby (North Lincs, including Scunthorpe and Grimsby / Cleethorpes)
- Actual customer take up of ANM offers will trigger the installation of the schemes.

Questions?

Summing Up

Andy MacLennan
Business Development Director

Lunch and Networking

Electric Vehicles Workshop

Phil Jagger

Design Team Manager

Unmetered supplies

- Street lighting.
- Elexon developed mCMS 2016 to accommodate smart cable.
- Use street lighting as chargers.
- Moveable meter (stays in the vehicle).
- Includes mobile communication and approved MID meter (15mins).
- Handshake protocol to verify charger and initiate charging.

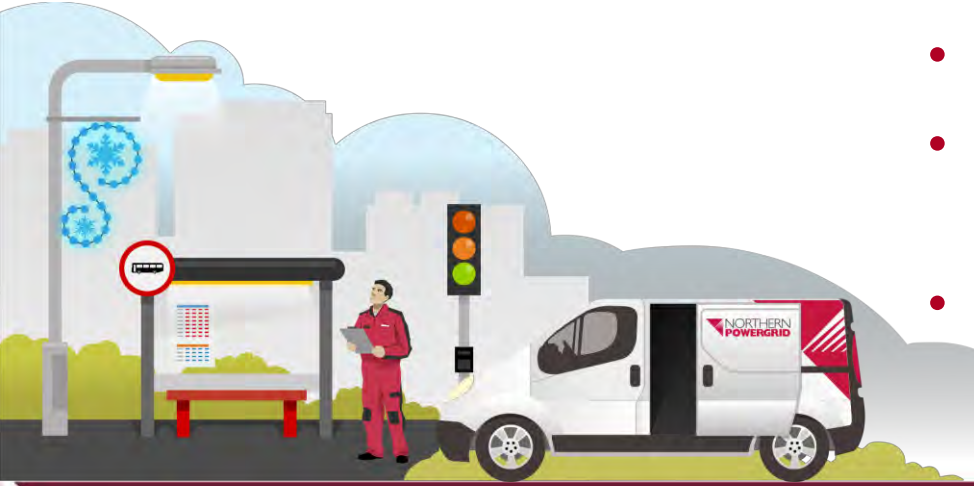

Street lighting supplies

- Limit - 1.38kW.
- Different connection arrangements.
- Technical considerations.
  - Small section cable.
  - 25A cut-out rating.
  - 25A and/or 6A fuse.
  - PME Earthing (additional electrode where applicable).
- EV chargers - TT Earthing with RCD to ensure protection.

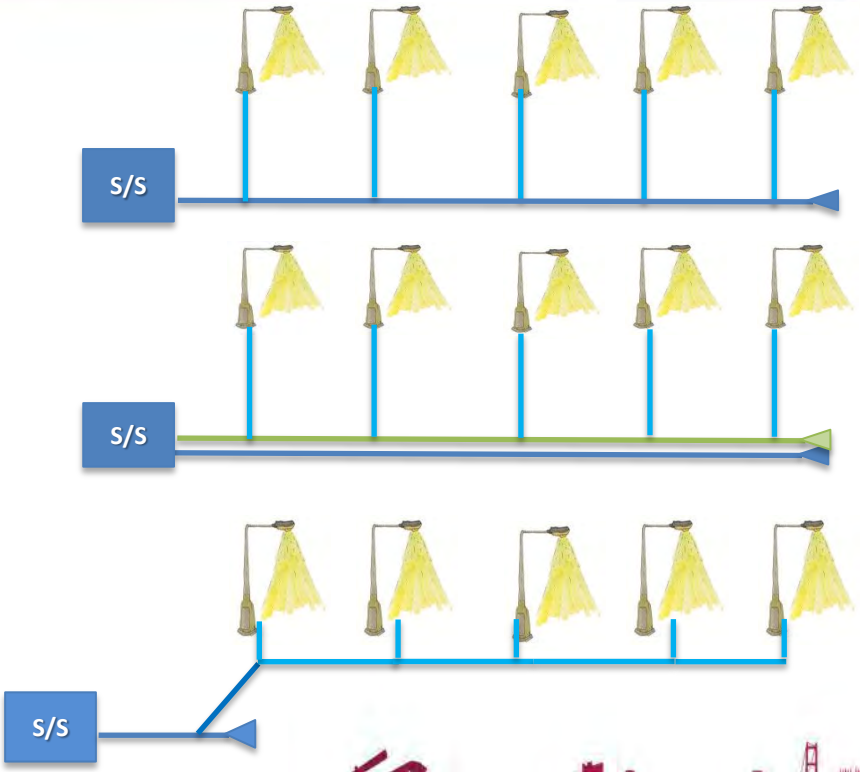

Domestic – existing

- A typical UK home has a fused cut-out.
- Generally fused at 80A (can be between 30A - 100A).
- Typically you can connect:
  - Slow ≤ 3kW
  - Fast ≤ 7.2 kW

Domestic – existing

New process:

- Connect and notify:
  1. Cut out is in good condition;
  2. Adequacy of supply is known and non looped;
  3. MD (load + EV) ≤ 60A (13.8kW) per phase.
- Apply:
  - Safety concerns;
  - Adequacy of supply is unknown and/or looped service;
  - MD > 60A*.

Note: MD > 60A but ≤ 100A – 10 day turnaround.

Small commercial

- Typical of small business.
- Three Phase Cut-out (<55kVA).
- Same principle as the domestic
  - Different load profile!
- <60A/phase - OK
- >60A/phase - Let us know

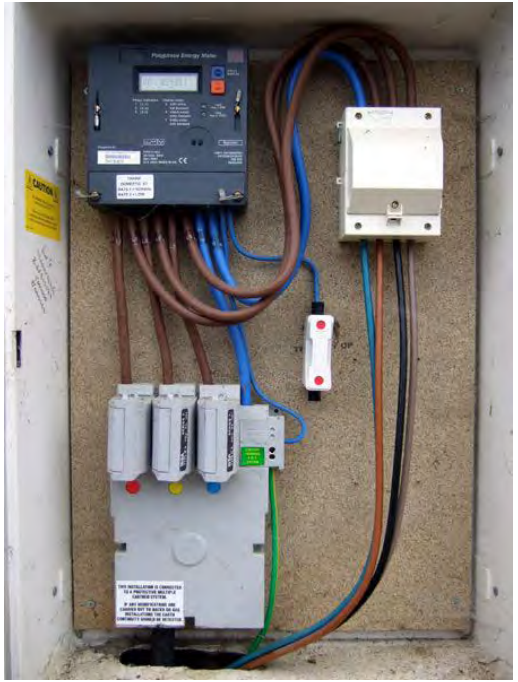

Note: Policy provision for 100A fuses (69kVA).

Commercial / Industrial

- Typically a >55kVA supermarket, large school, or factory etc.
- Industrial Service Unit (ISU), LV Air Circuit Breaker or HV metered.
- CT Metered and half hourly metered.

Commercial / Industrial

- Have a connection agreement for a bespoke ‘agreed capacity’.
- Within that ‘agreed capacity’ – you are ok to connect.
- Usually electrical consultant or contractor will assess your maximum demand.
- For example: One of our Northern Powergrid sites, 275kVA - 154kVA = **121kVA** spare capacity (at least) so you don’t need to tell us if you plan to take less than your agreed capacity.

Month	Agreed Capacity (kVA)	Maximum Demand (kW)	MD Day	MD HH Period Start Time	Peak (kva)
September-17	275	108.2	22-Sep-17	09:30	109
October-17	275	135.2	30-Oct-17	08:30	135
November-17	275	134.8	13-Nov-17	10:00	135
December-17	275	153.8	12-Dec-17	10:30	154
January-18	275	153	08-Jan-18	09:00	153
February-18	275	147	05-Feb-18	10:00	147
March-18	275	151	02-Mar-18	09:30	151
April-18	275	128.6	05-Apr-18	09:00	129
May-18	275	114.2	03-May-18	09:30	114
June-18	275	103	21-Jun-18	11:00	104
July-18	275	105.6	02-Jul-18	11:00	106
August-18	275	102.8	14-Aug-18	11:00	103

Rapid charging service station

- Motorway services/trunk roads.
- Normally these sites use less than 1MW but with multiple rapid chargers - multi MW.
- Can be very costly, especially in rural areas with HV OHL and/or far from Primary Substation.
- We can take 0.5-2MVA at reasonable cost but above that - usually cable back to the primary.
- Treated like any other new connection.
- 5MW is the max demand (2,500 houses).

Sizes of charger mapping

Connection 'size' offered	Maximum load	Typical max charger size	Approx. charging time (Nissan Leaf 40kWh)	Road analogy
LV Street Light (unmetered)	*≤1.4kW*	*1.4kW*	*30 hours*	*Farm Track*
LV 1ph	≤18kW	7kW	6 hours	B road
LV 3ph	≤55kW	43kW	1 hour	A road
LV 3ph CT metered	≤276kW (fuse) ≤1,100kW (ACB)	120kW 350kW	20mins 7mins	Dual carriageway
HV CT metered	≤8,000kW	350kW	7mins	Motorway

Discussion

Flexibility Workshop

Andrew McKenna

Commercial Development Manager

Agenda

- Introduction/objectives
- Background to DSO/flexibility
- 2019 timeframe
- Flexibility products
- Routes to market
- Discussion

Objectives

Workshop aim:

- Present how flexibility fits into our DSO Development Plan.
- Provide a high level overview of our 2019 flexibility roadmap.
- Use as a platform to how we can improve the process for more efficient connections.

Background

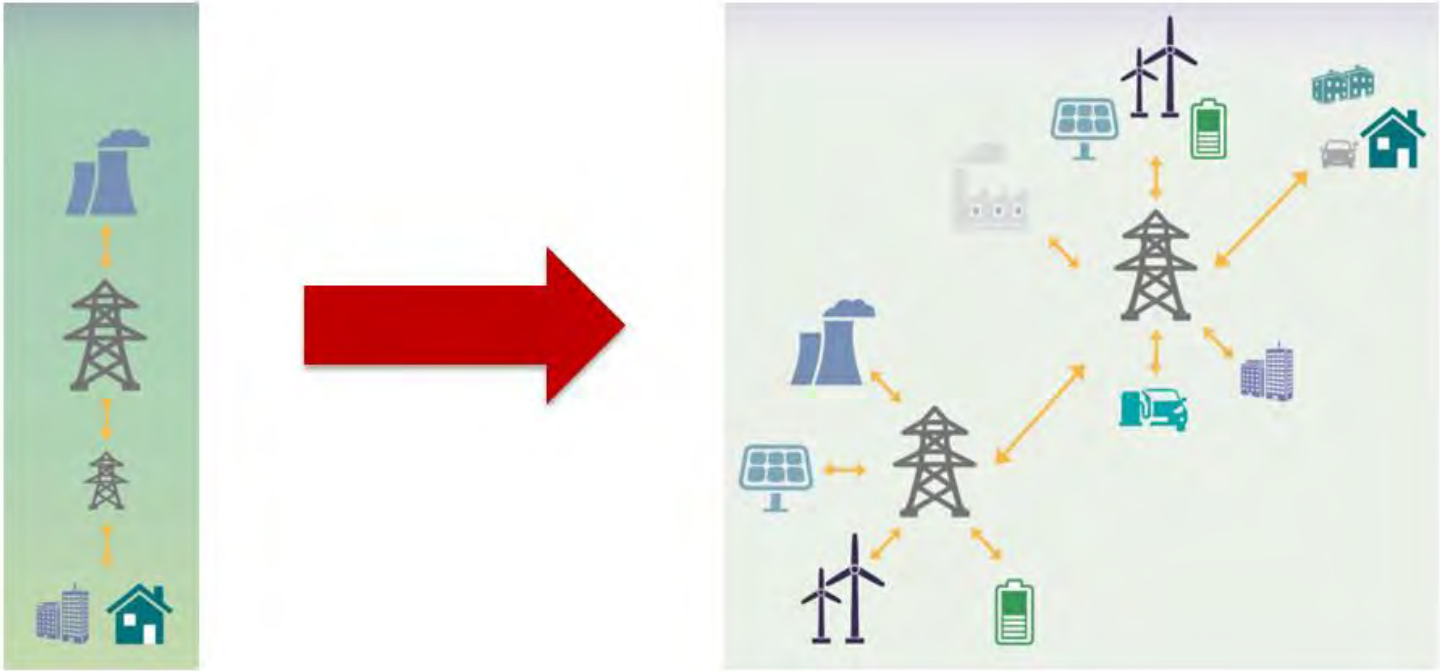

What is system flexibility?

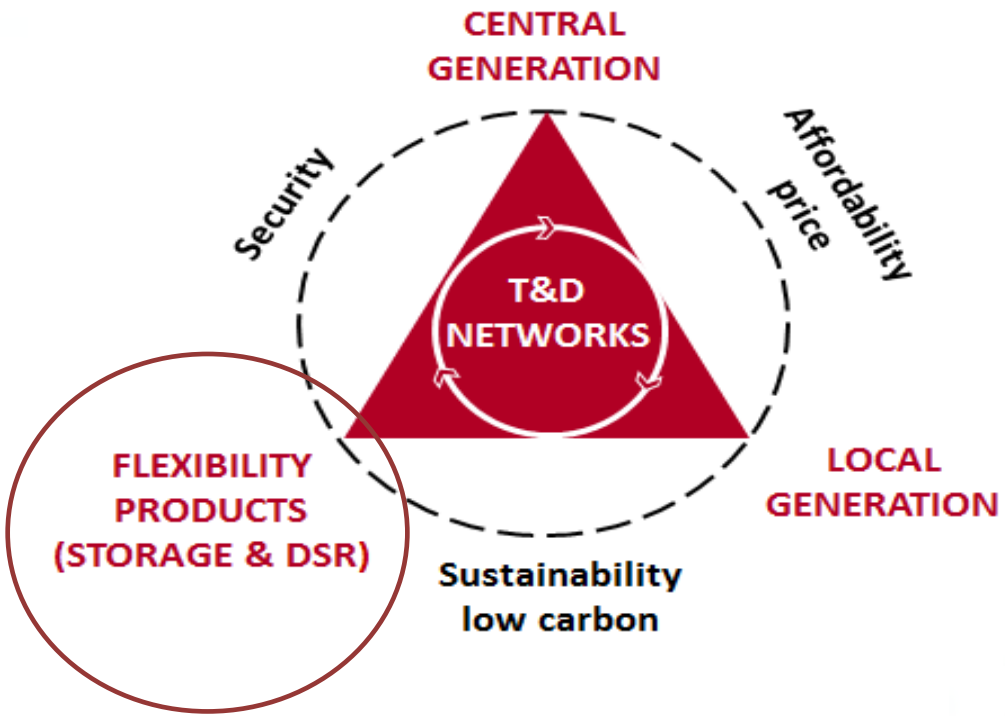

DSO overview

- Challenges affecting different parts of the system vary.
- SW areas have high levels of PV installed on the distribution network – creating fluctuating import/export GSPs throughout the day.
- Demand growth in the SE prompting reinforcement.
- Yorkshire/North East, small number of key areas that have been identified for reinforcement work in the near future.

DSO approach to flexibility

- Aim to test flexibility from DER as an option as opposed to simply going down the traditional route of new network infrastructure
- Through the ENA Open Networks Project, we have developed an initial set of products that provide flexibility in different ways
- These will be procured through multiple routes, including a flexibility platform that will identify areas where we are looking to procure flexibility.

Indicative flexibility timeframe

Nov 2018	Dec 2018	May 2019	July 2019	Nov 2019
Publish expressions of interest (EoI)	Evaluate if competitive tenders are appropriate	Launch competitive tender/auction	Successful bidders notified	Utilisation of flexibility

Open Networks flexibility product

Scheduled constraint management

- Typically contracted for utilisation for long term scheduled period of time – e.g. every weekday in winter between 0800-2000. Usually referred to as reinforcement deferral.

Pre-fault constraint management (manual or automatic)

- Control room has contractual right to instruct change in generation/demand of asset based on their assessment of live network conditions – decision is made close to real time.

Post-fault constraint management

- Contracts will be put in place months ahead of time as an 'insurance type' product
- In the event of a fault, instruction can be sent to asset to change load such that a sustainable post-fault flow can be achieved.

Restoration

- Following loss of supply, DSO instructs a provider to remain off supply or reconnect at different load.

Initial route to flexibility market

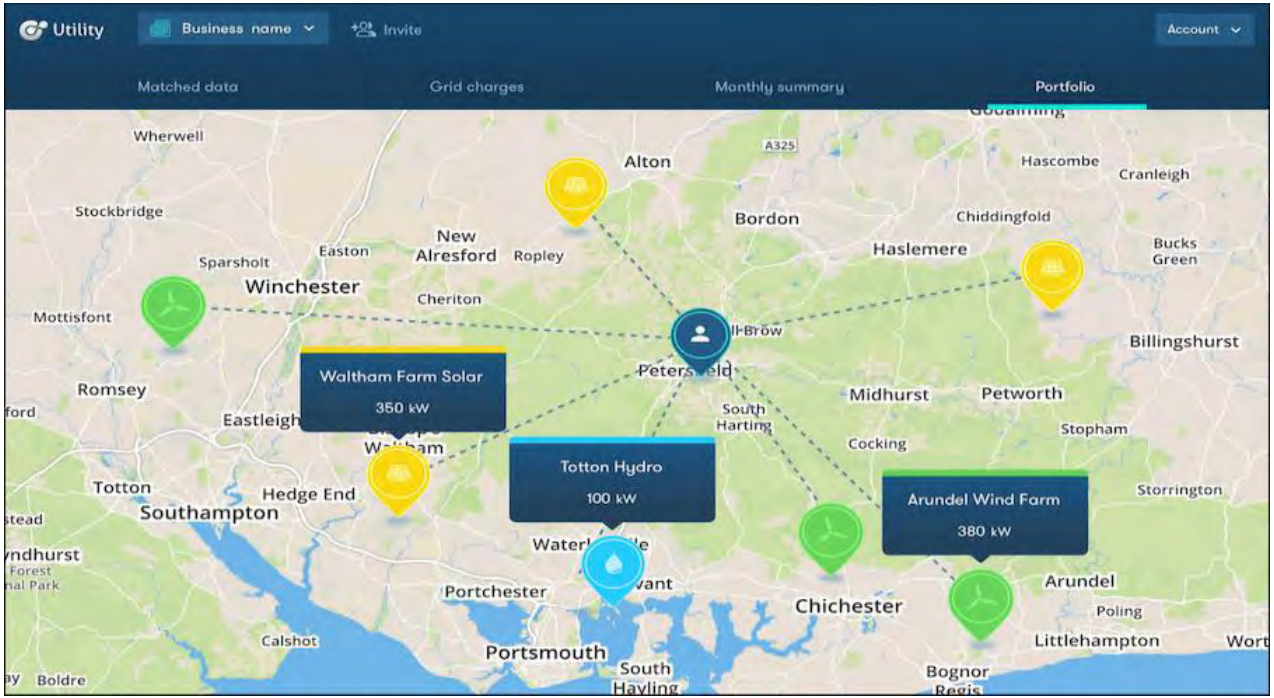

NORTHERN POWERGRID

Discussion

- Tender period
- Procurement method

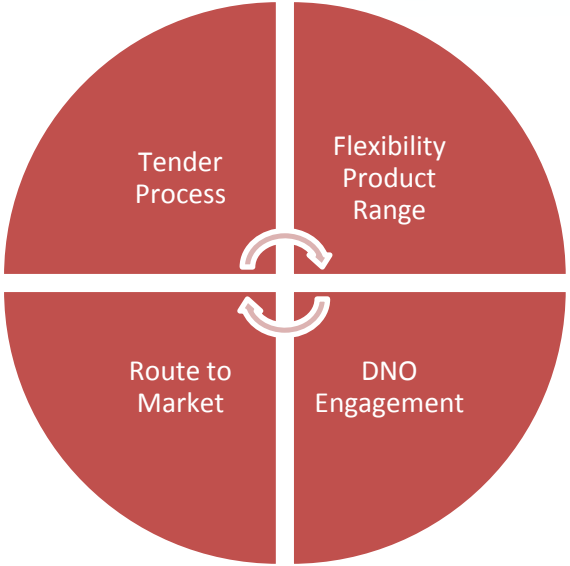

- Complexity and range of products
- Stakeholder suitability

- Customer interface
- Flexibility platforms

- Future stakeholder events
- DSO publications

Network Constraints and Curtailment Workshop

Chris Newman

Design Team Manager

Purpose

- ✓ ICE action
  - ✓ Seeking your views
    - ✓ Develop our proposals

Constraints

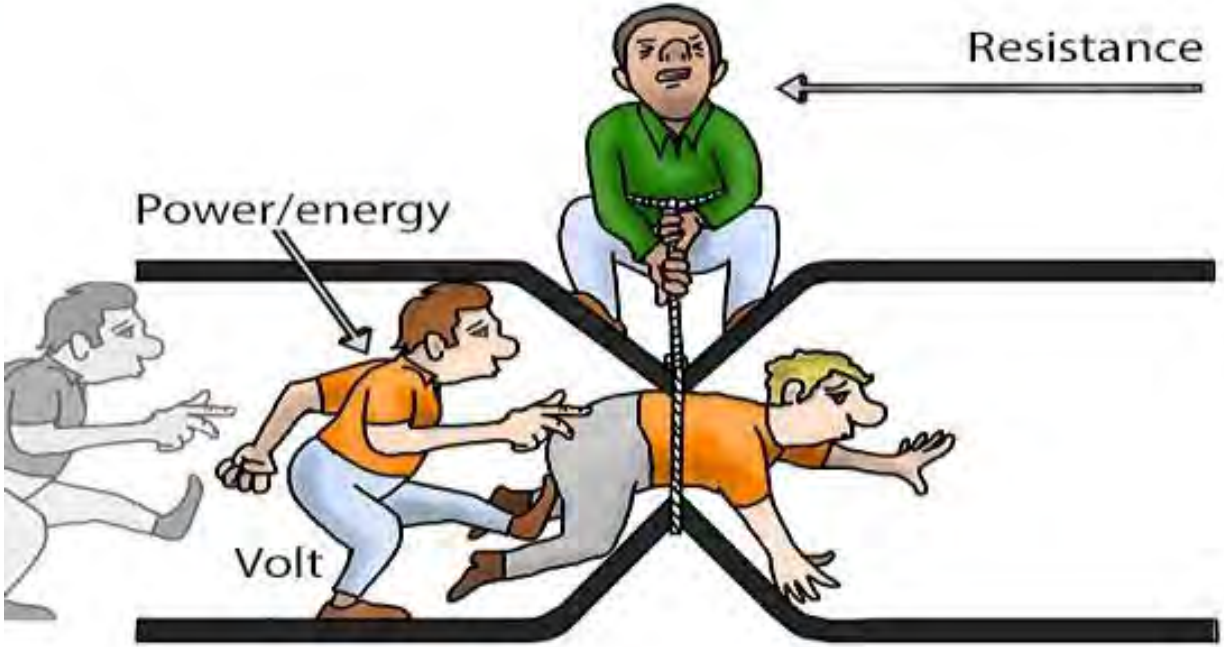

Curtailment

Network fully intact

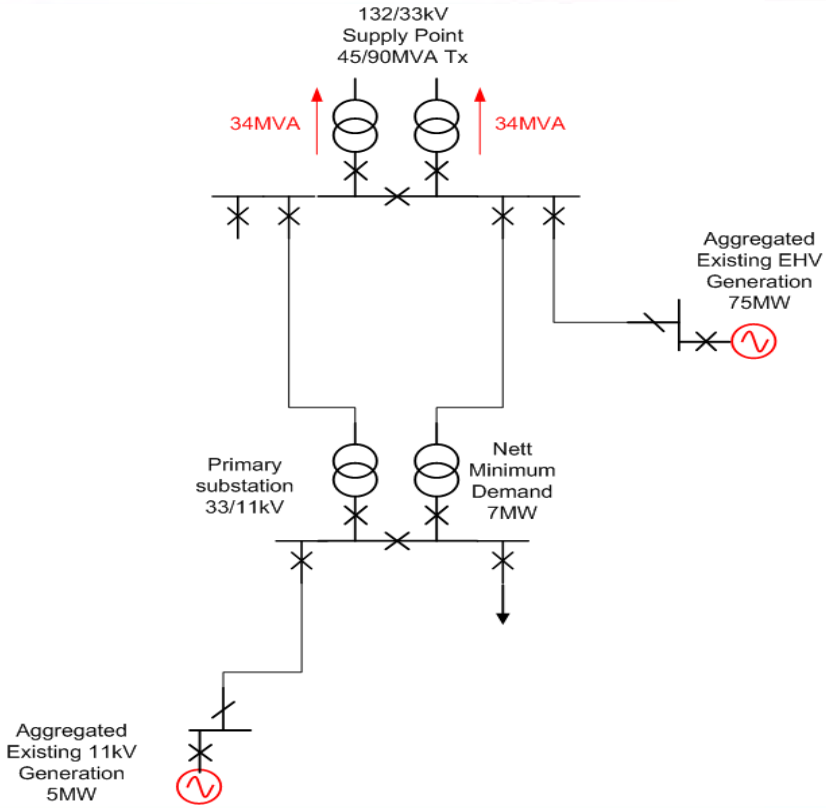

Network feeding abnormally

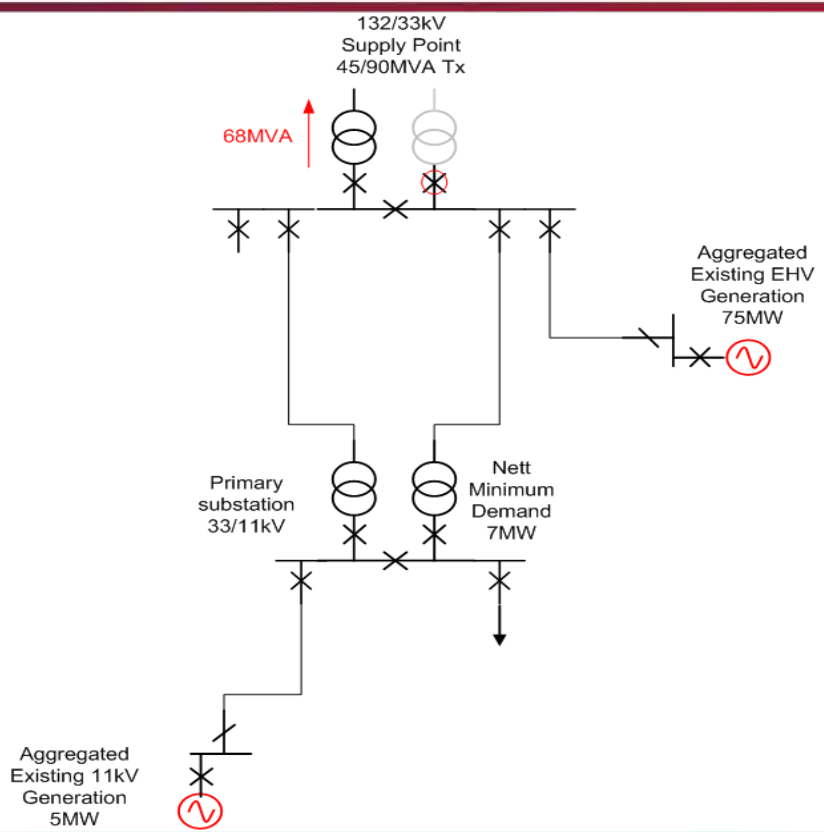

Standard connection

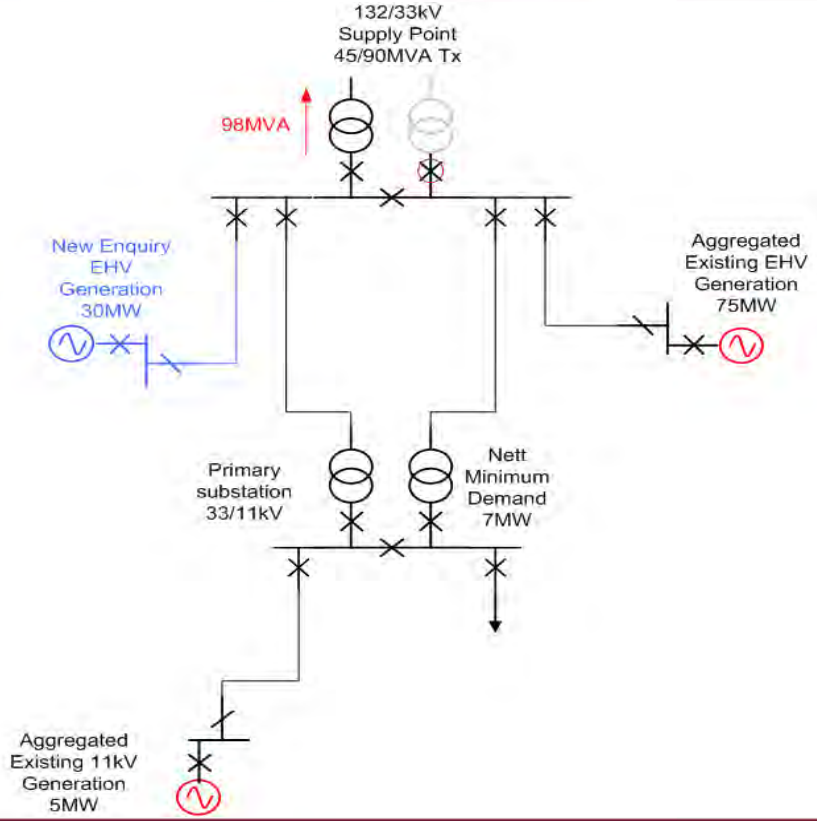

Seeking your views

- What information do you want from us?
- At what voltage level would this apply?
- Timing -Pre or post acceptance?
- Is this something worth paying for?
- Impact on Guaranteed Standards.
- Any ideas or observations you wish to add?

Next steps

Questions?